Canada – Global Headquarters
Canadian Solar Inc.
545 Speedvale Avenue West, Guelph, Ontario, N1K 1E6
P +1 519 837 1881
F +1 519 837 2550
Sales Inquiries Email: info@canadiansolar.com
Customer Support Email: service.ca@canadiansolar.com

Europe, Middle East & Africa
Canadian Solar EMEA GmbH
LandsbergerStraße 94, 80339 Munich, Germany
P +49 (0) 89 519 968 90
F +49 (0) 89 519 968 911
Sales Inquiries Email: sales.emea@canadiansolar.com
Customer Support Email: service.emea@canadiansolar.com

Australia
Canadian Solar MSS (Australia) Pty Ltd
44 Stephenson St, Cremorne VIC 3121, Australia
P +61 (3) 860 918 44
Sales Inquiries Email: sales.au@canadiansolar.com
Customer Support Email: service.au@canadiansolar.com

South East Asia
101 Thompson Road #15-03 United Square, Singapore 307591
P +65 6572 905
F +65 6559 4690
Sales Inquires Email: sales.sg@canadiansolar.com
Customer Support Email: service.cn@canadiansolar.com

Latin America
Canadian Solar Brazil
Avenida Roque Petroni Junior, 999, 4º andar Vila Gertrudes,
São Paulo, Brasil,CEP 04707-910
P +55 11 3957 0336
Sales Inquiries Email:sales.br@canadiansolar.com
Customer Support Email: service.latam@canadiansolar.com

CSI SERIES GRID-TIED PV Inverter (12-20)kW
INSTALLATION AND OPERATION MANUAL
VERSION 1.0 (2020.4)

CANADIAN SOLAR INC.
Canada, 545 Speedvale Avenue West, Guelph, Ontario, Canada N1K 1E6
www.canadiansolar.com

Contents

1.1 Product Description

Canadian Solar three phase inverters integrate DRM and backflow power control function, that could suitable for smart grid requirement.
This manual covers the three phase inverter model listed below:
CSI-12K-T400GL01-E, CSI-15K-T400GL01-E, CSI-17K-T400GL01-E, CSI-20K-T400GL01-E

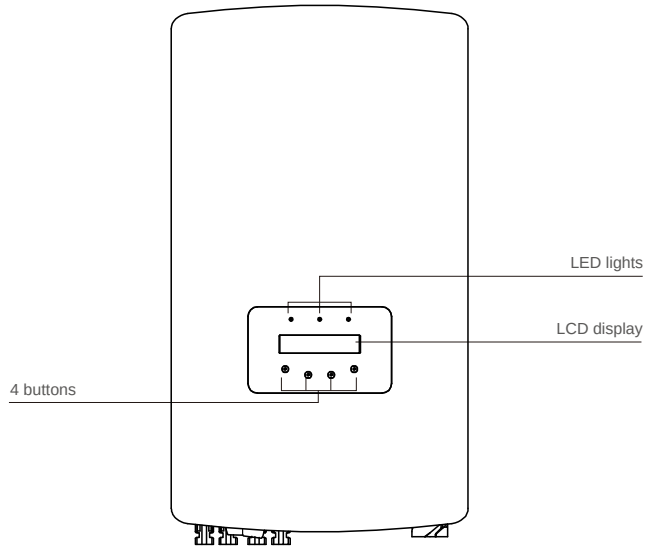

Figure 1.1 Front view

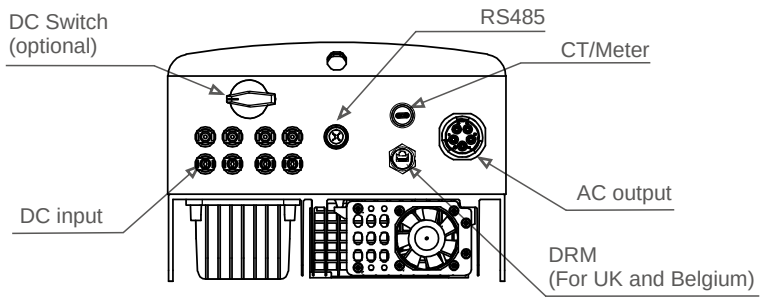

Figure 1.2 Bottom view

1. Introduction

1.2 Packaging

When you receive the inverter, please ensure that all the parts listed below are included:

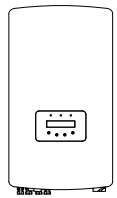

Inverter x1

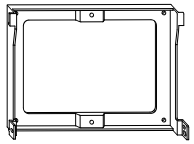

Back plate x1

Fastening screw x2

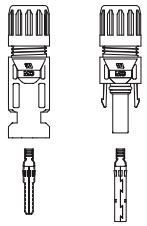

DC connector x4

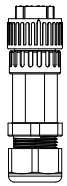

AC connector x1

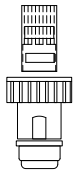

RJ45 connector x1
(For UK and Belgium)

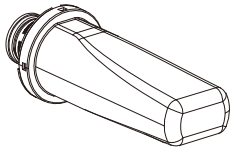

WiFi/GPRS Stickx1
Optional

User manual x1

If anything is missing, please contact your local Canadian Solar distributor.

2.1 Safety Symbols

Safety symbols used in this manual, which highlight potential safety risks and important safety information, are listed as follows:

WARNING:
WARNING symbol indicates important safety instructions, which if not correctly followed, could result in serious injury or death.

NOTE:
NOTE symbol indicates important safety instructions, which if not correctly followed, could result in some damage or the destruction of the inverter.

CAUTION:
CAUTION, RISK OF ELECTRIC SHOCK symbol indicates important safety instructions, which if not correctly followed, could result in electric shock.

CAUTION:
CAUTION, HOT SURFACE symbol indicates safety instructions, which if not correctly followed, could result in burns.

2.2 General Safety Instructions

WARNING:
Please don't connect PV array positive(+) or negative(-) to ground, it could cause serious damage to the inverter.

WARNING:
Electrical installations must be done in accordance with the local and national electrical safety standards.

WARNING:
To reduce the risk of fire, over-current protective devices (OCPD) are required for circuits connected to the Inverter.
The DC OCPD shall be installed per local requirements. All photovoltaic source and output circuit conductors shall have disconnects that comply with the NEC Article 690, Part II. All Canadian Solar three phase inverters feature an integrated DC switch.

CAUTION:
Risk of electric shock. Do not remove cover. There is no user serviceable parts inside. Refer servicing to qualified and accredited service technicians.

2. Safety Instructions

CAUTION:
The PV array (Solar panels) supplies a DC voltage when they are exposed to sunlight.

CAUTION:
Risk of electric shock from energy stored in capacitors of the Inverter.
Do not remove cover for 5 minutes after disconnecting all power sources (service technician only). Warranty may be voided if the cover is removed without unauthorized.

CAUTION:
The surface temperature of the inverter can exceed 75 (167F).
To avoid risk of burns, DO NOT touch the surface when inverter is operating.
The inverter must be installed out of reach of children.

2.3 Notice For Use

The inverter has been constructed according to the applicable safety and technical guidelines. Use the inverter in installations that meet the following specifications only:

1.Permanent installation is required.

2.The electrical installation must meet all the applicable regulations and standards.

3.The inverter must be installed according to the instructions stated in this manual.

4.The inverter must be installed according to the correct technical specifications.

5.To startup the inverter, the Grid Supply Main Switch (AC) must be switched on, before the solar panel's DC isolator shall be switched on. To stop the inverter, the Grid Supply Main Switch (AC) must be switched off before the solar panel's DC isolator shall be switched off.

3. Overview

3.1 Front Panel Display

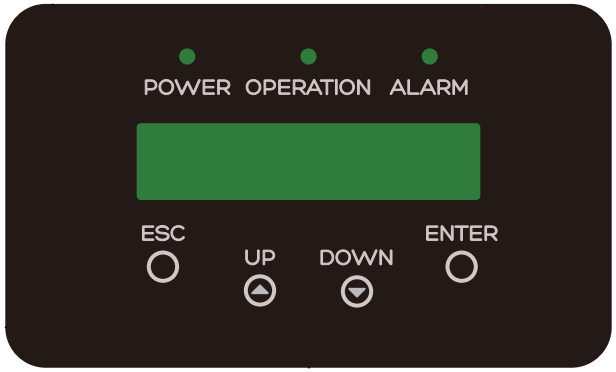

Figure 3.1 Front Panel Display

3.2 LED Status Indicator Lights

	Light	Status	Description
①	POWER	ON	The inverter can detect DC power.
		OFF	No DC power or low DC power.
②	OPERATION	ON	The inverter is operating properly.
		OFF	The inverter has stopped to supply power.
		FLASHING	The inverter is initializing.
③	ALARM	ON	Alarm or fault condition is detected.
		OFF	The inverter is operating without fault or alarm.

Table 3.1 Status Indicator Lights

3.3 Keypad

There are four keys in the front panel of the Inverter(from left to right): ESC, UP, DOWN and ENTER keys. The keypad is used for:

- Scrolling through the displayed options (the UP and DOWN keys);
- Access to modify the adjustable settings (the ESC and ENTER keys).

3.4 LCD

The two-line Liquid Crystal Display (LCD) is located on the front panel of the Inverter, which shows the following information:

- Inverter operation status and data;
- Service messages for operator;
- Alarm messages and fault indications.

4. Product handing and storage

4.1 Product handling

Please review the instruction below for handling the inverter:

1 The red circles below denote cutouts on the product package.
Push in the cutouts to form handles for moving the inverter (see Figure 4.1).

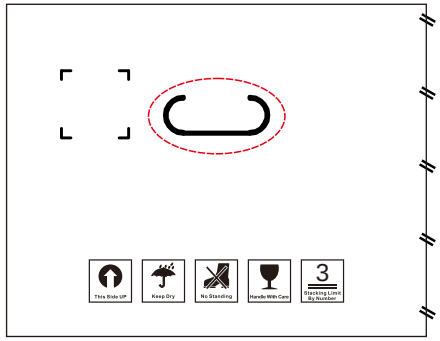

Figure 4.1 move the inverter

2.Open the carton, then handle both sides of inverter through the area denoted dotted line. (see figure 4.2).

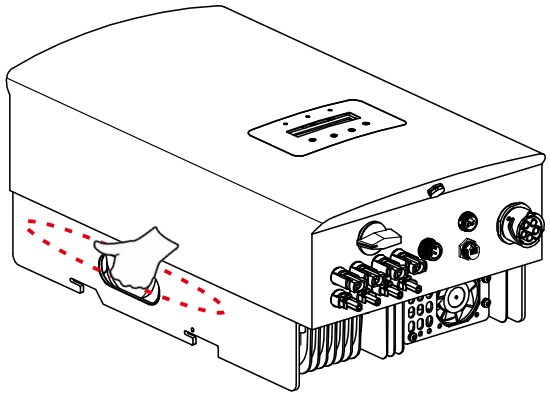

Figure 4.2 Inverter handles

4.2 Product Storage

If the inverter is not to be installed immediately, storage instructions and environmental conditions are below:

- Use the original box to repackage the inverter, seal with adhesive tape with the desiccant inside the box.
- Store the inverter(s) in a clean and dry place, free of dust and dirt.
- Storage temperature must be between -40 and 70 and the humidity should be between 0 and 100% non-condensing.
- Stack no more than three (3) inverters high.
- Keep box(es) away from corrosive materials to avoid damage to the inverter enclosure.
- Inspect packaging regularly. If packaging is damaged(wet, pest damage, etc), repackage the inverter immediately.
- Store the inverter(s) on a flat, hard surface - not inclined or upside down.
- After long-term storage, the inverter needs to be fully examined and tested by qualified service or technical personnel before using.
- Restarting after a long period of non-use requires the equipment to be inspected and, in some cases, the removal of oxidation and dust that has settled inside the equipment will be required.

5.1 Select a Location for the Inverter

To select a location for the inverter, the following criteria should be considered:

WARNING: Risk of fire

Despite careful construction, electrical devices can cause fires.

- Do not install the inverter in areas containing highly flammable materials or gases.
- Do not install the inverter in potentially explosive atmospheres.

- Do not install in small closed spaces where air can not circulate freely. To avoid overheating, always make sure the flow of air around the inverter is not blocked.
- Exposure to direct sunlight will increase the operational temperature of the inverter and may cause output power limiting. Canadian Solar recommends inverter installed to avoid direct sunlight or raining.
- To avoid over heating ambient air temperature must be considered when choosing the inverter installation location. Canadian Solar recommends using a sun shade minimizing direct sunlight when the ambient air temperature around the unit exceeds 104°F/40°C.

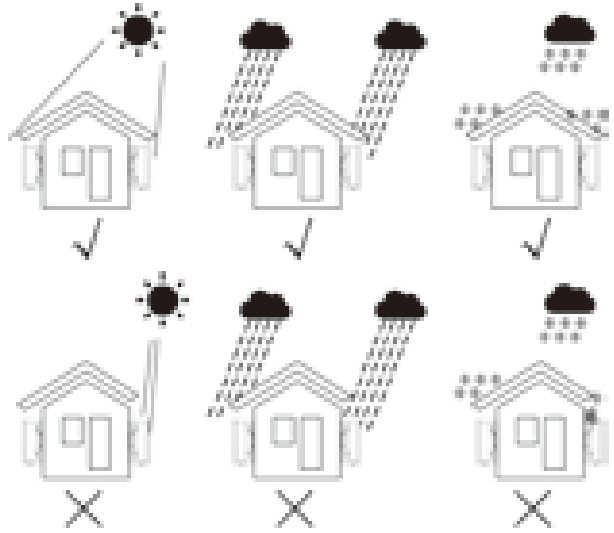

Figure 5.1 Recommended Installation locations

NOTE:

Nothing should be stored on or placed against the inverter.

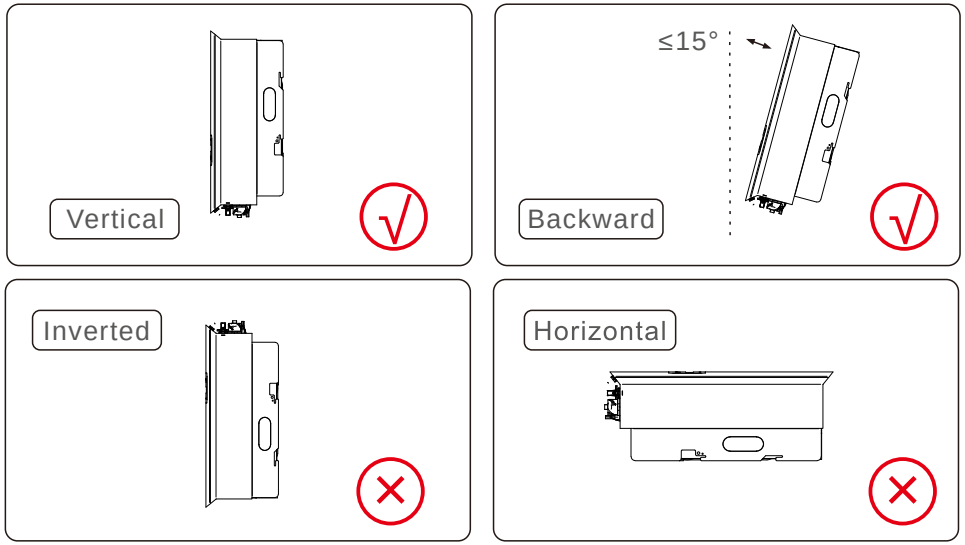

- The visibility of LED status indicator lights and LCD should be considered.
- Install vertically (+/- 5°) or tilted backward (<=15°).
- Don't mount inverter on the tilted forward wall.
- Don't mount inverter on the horizontal.

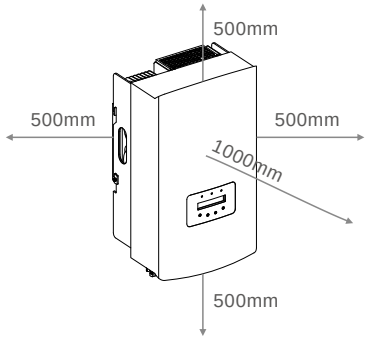

Figure 5.2 Inverter Mounting clearance

- Temperature of inverter heat sinker might 167 /75 .
- Inverter is designed for working extreme environment, operation temperature range: -15 /25 ~149 /65 .
- When 1 or more inverters are installed in one location, a minimum 500mm clearance should be kept between each inverter or other object. The bottom of the inverter should be 500mm clearance to the ground.

5. Installation

5.2 Mounting the Inverter

Dimensions of mounting bracket:

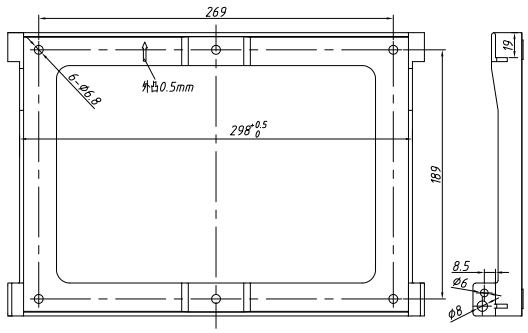

Figure 5.3 Inverter wall mounting

Refer to figure 5.4 and figure 5.5. Inverter shall be mounted vertically.
The steps to mount the inverter are listed below.

1. Refer to Figure 5.4, the holes for expansion bolt based on the hole diameter of bracket (ST6.3*60 cross recessed hexagon head tapping screws, HJ0108 10*50mm fished expandable tubular), using the percussion drilling with the 10mm drill need to stay vertically on the wall.And the drill hole must be vertically on the wall.
   And all drill holes' depth is 60mm.

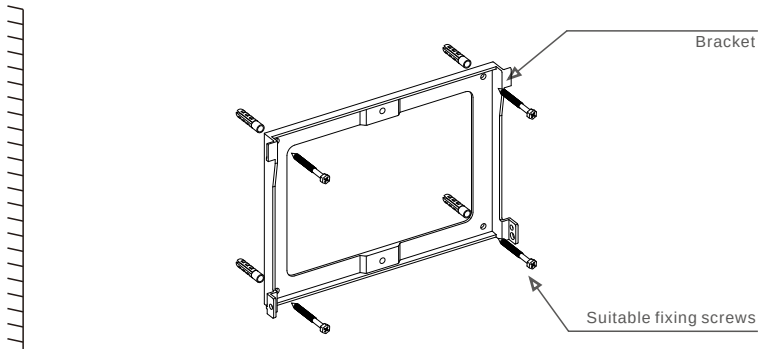

Figure 5.4 Inverter wall mounting

2. Make sure the bracket is horizontal. And the mounting holes (in Figure 5.4) are marked correctly. Drill the holes into wall at your marks.
3. Use the suitable expansion screws to fix the bracket on the wall.

5. Installation

WARNING:
The inverter must be mounted vertically.

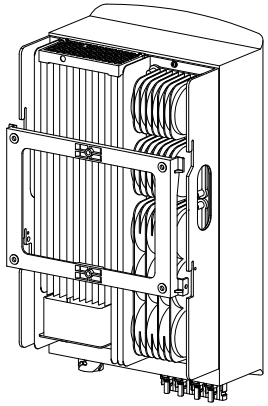

Figure 5.5 Install the inverter

4. Lift the inverter and hang it on the backet, and fixing both sides of inverter with locking screws (accessories).

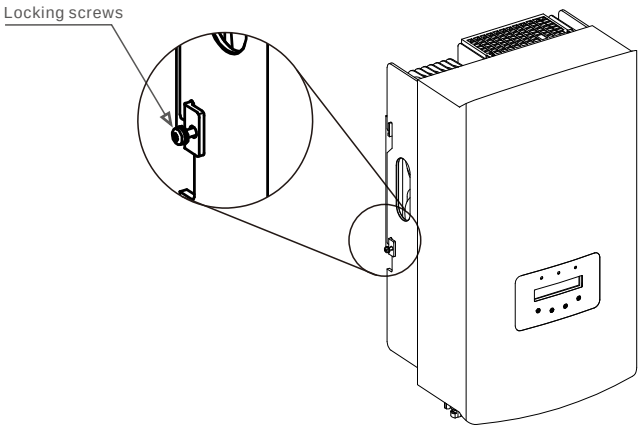

Figure 5.6 Fixed the inverter

5. Anti-theft lock mount(optional)
Anti-theft lock(User-supplied) function is that inverter is fixed in bracket in case theft. The lock is selected by 5mm(the keyhole diameter), and the lock of stainless steel is preferred.

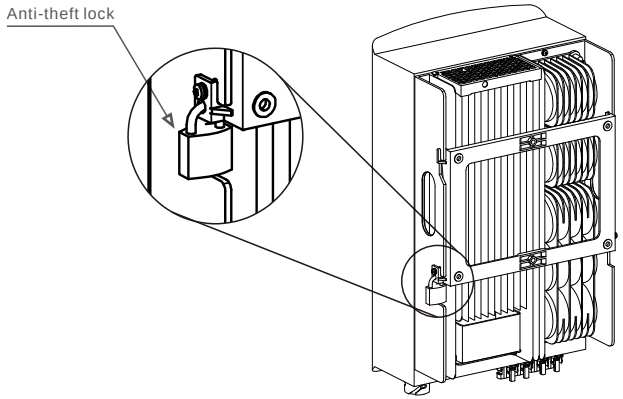

Figure 5.7 Install security lock

5.3 Electrical Connections

Inverter designs quick-connect terminal, so top cover needn't open during electrical connection. The sign meaning located the bottom of inverter, as shown below in table 5.1. All electrical connections are suit for the local or national standard.

+	Positive DC input terminal
-	Negative DC input terminal
DC 1	DC input terminal
DC 2	DC input terminal
DC SWITCH	Switch of DC input terminals
COM	RJ45 and terminal block for RS485 communication port
GRID	Connecting terminal of the Grid

Table 5.1 Electrical connection symbols

The electrical connection of the inverter must follow the steps listed below:

1. Switch the Grid Supply Main Switch (AC) OFF.
2. Switch the DC Isolator OFF.
3. Assemble PV input connector to the Inverter.

5.3.1 Grounding

Canadian Solar recommends 2 ground protection methods: Through grid terminal connection and external heat sink connection.

If AC terminal is used to connect ground, please refer to the contents of 5.3.3.

If the heat sink is used to connect the ground, please follow the steps below:

1) Prepare the grounding cable: recommend to use the ≥ 6mm² outdoor copper-core cable.

2) Prepare OT terminals: M6.

Important:
For multiple inverters in parallel , all inverters should be connected to the same ground point to eliminate the possibility of a voltage potential existing between inverter grounds.

3) Strip the ground cable insulation to a suitable length(see Figure 5.8).

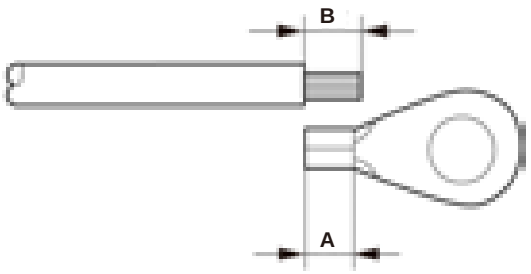

Figure 5.8 suitable length

Important:
B (insulation stripping length) is 2mm~3mm longer than A (OT cable terminal crimping area) 2mm~3mm.

4) Insert the stripped wire into the OT terminal crimping area and use the hydraulic clamp to crimp the terminal to the wire (see Figure 5.9).

5. Installation

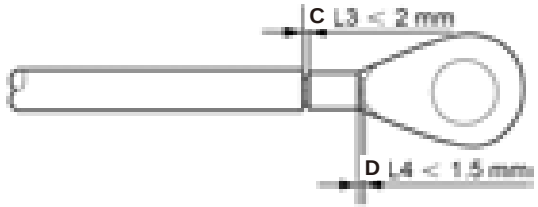

Figure 5.9 strip wire

Important:
After crimping the terminal to the wire, inspect the connection to ensure the terminal is solidly crimped to the wire.

5) Remove the screw from the heat sink ground point.

6) Connect the grounding cable to the grounding point on the heat sink,and tighten the grounding screw, Torque is 3Nm(see figure 5.10).

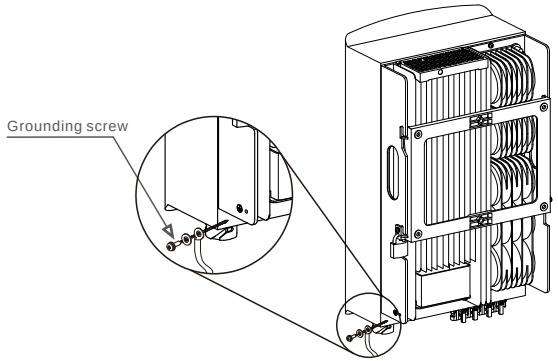

Figure 5.10 Fixed cable

Important:
For improving anti-corrosion performance,
after ground cable installed, apply silicone or paint is preferred to protect.

5.3.2 Connect PV side of inverter

Before connecting inverter, please make sure the PV array open circuit voltage is within the limit of the inverter.

Before connection, please make sure the polarity of the output voltage of PV array matches the “ DC+ ” and “ DC- ” symbols.

Before connecting inverter, please make sure the PV array open circuit voltage is within the limit of the inverter.

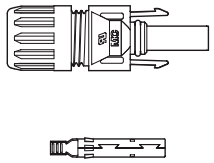

Figure 5.11 DC+ Connector

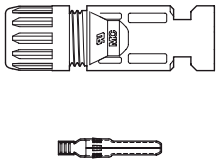

Figure 5.12 DC- Connector

Please use approved DC cable for PV system.

Cable type	Cross section mm²	
	Range	Recommended value
Industry generic PV cable model:PV1-F	4.0~6.0 12~10AWG	4.0 12AWG

The steps to assemble the DC connectors are listed as follows:

1. Strip off the DC wire for about 7mm, Disassemble the connector cap nut. (see Figure 5.13)
2. Insert the wire into the connector cap nut and contact pin. (see Figure 5.14)
3. Crimp the contact pin to the wire using a proper wire crimper. (see Figure 5.15)
4. Insert metal connector into top of connector, and tighten nut with torque 2.5-3 Nm (see figure 5.16).

5. Installation

5. Measure PV voltage of DC input with multimeter, verify DC input cable polar (see figure 5.17), and ensure each string of PV voltage in range of inverter operation. Connect DC connector with inverter until hearing a slight clicking sound indicates connection succeed. (see figure 5.18)

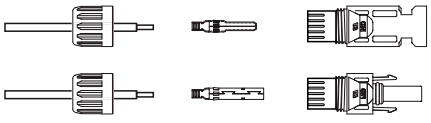

Figure 5.13 Disassemble the Connector Cap nut

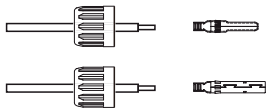

Figure 5.14 Insert the Wire into the Connector Cap nut and contact pin

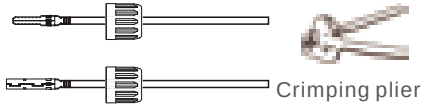

Figure 5.15 Crimp the contact pin to the wire

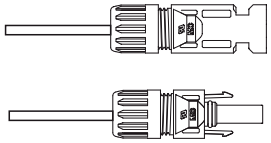

Figure 5.16 Connector with Cap nut Screwed on

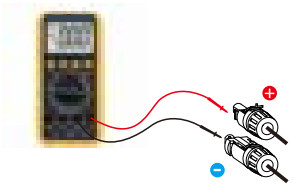

Figure 5.17 Multimeter measurement

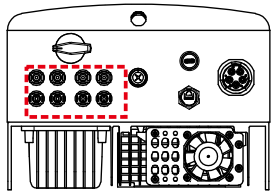

Figure 5.18 Connect the DC Connectors to the Inverter

Caution:

If DC inputs are accidently reversely connected or inverter is faulty or not working properly, it is NOT allowed to turn off the DC switch as it will damage the inverter and even leads to a fire disaster.

The correct actions are:

*Use a clip-on ammeter to measure the DC string current.

*If it is above 0.5A, please wait for the solar irradiance reduces until the current decreases to below 0.5A.

*Only after the current is below 0.5A, you are allowed to turn off the DC switches and disconnect the PV strings.

Please note that any damages due to wrong operations are not covered in the device warranty.

5.3.3 Connect grid side of inverter

For all AC connections, 6-16mm², YJV-0.6/1KV cable is required to be used. Please make sure the resistance of cable is lower than 1.50hm. If the wire is longer than 20m, preferred to 10-16mm² cable.

Internal of AC connector signs "L1","L2","L3","N" and "PE⏚" five connection ports (see Figure 5.21). Three live wires are connected the "L1", "L2"and "L3" terminals respectively; ground wire connects "PE⏚"; neutral wire connects "N" terminal:

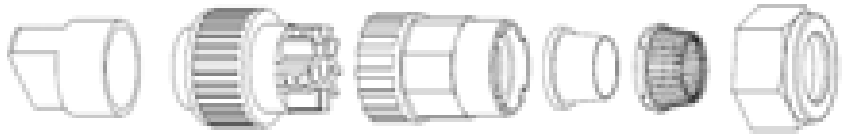

Figure 5.19 AC connector

	Number	Description	
Accessory	A	Plastic fixture (Auxiliary installation	
AC connectors	B	Socket element	
	C	Adapter	
	D*	Seal ring	Seal ring (thick) suit for 12-18mm cable
			Seal ring (thin) suit for 16-21mm cable
	E	Fastening case	
	F	Swivel nut	

*The combination of AC connectors has two seal rings, please refer to different diameters of cable select corresponding seal ring.

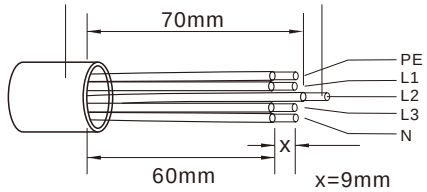

Figure 5.20 Stripped and bared wire

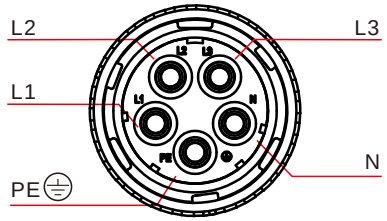

Figure 5.21 Internal structure of AC connector

The steps of AC gird terminal connector for install as follows:

A) Stripped the insulation sleeve of cable for 70mm, so that bared copper-cored connector reaches for 9mm. Cable through nut and sleeve of socket element, insert corresponding terminals and tighten with allen wrench (see figure 5.22).

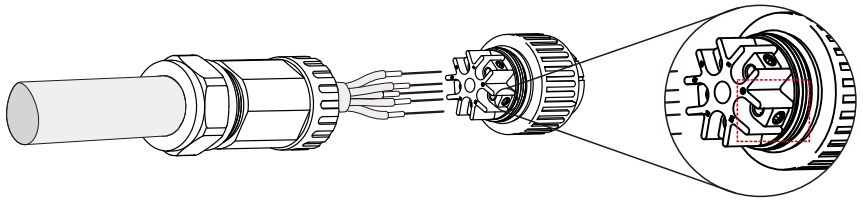

Figure 5.22 Connected cable

Tighten cable with 3.0 mm allen wrench(focus in dotted box, see figure 5.22). Allen screw is easy to drop off, don't screw out completely.

B) Clip plastic fixture (Auxiliary tighten) in socket element , tighten adapter in socket element, then tighten swivel nut with 3-4Nm torque (see figure 5.23).

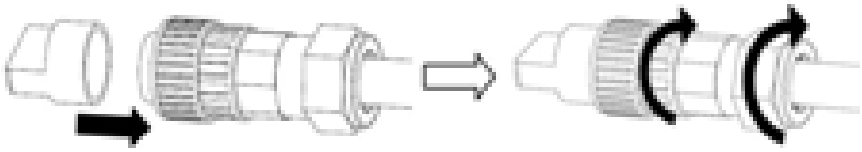

Figure 5.23 Assembly AC terminal

C) Connect AC connector with inverter, then tighten AC connector for clockwise (see figure 5.24), until hearing a slight clicking sound indicates connection succeed.

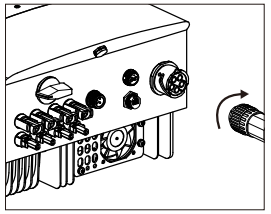

Figure 5.24 AC connector to inverter

5.3.4 Max. over current protection device (OCPD)

To protect the inverter's AC grid connection conductors, Canadian Solar recommends installing breakers that will protect against overcurrent. The following table defines OCPD ratings for the Canadian Solar 12-20kW three phase inverters.

Inverter	Rated voltage(V)	Rated output current (A)	Current for protection device (A)
CSI-12K-T400GL01-E	400	17.3	32
CSI-15K-T400GL01-E	400	21.7	32
CSI-17K-T400GL01-E	400	24.6	40
CSI-20K-T400GL01-E	400	28.9	40

Table 5.2 Rating of grid OCPD

5.3.5 Inverter monitoring connection

The inverter can be monitored via Wi-Fi or GPRS. All Canadian Solar communication devices are optional (Figure 5.25). For connection instructions, please refer to the Canadian Solar Monitoring Device installation manuals.

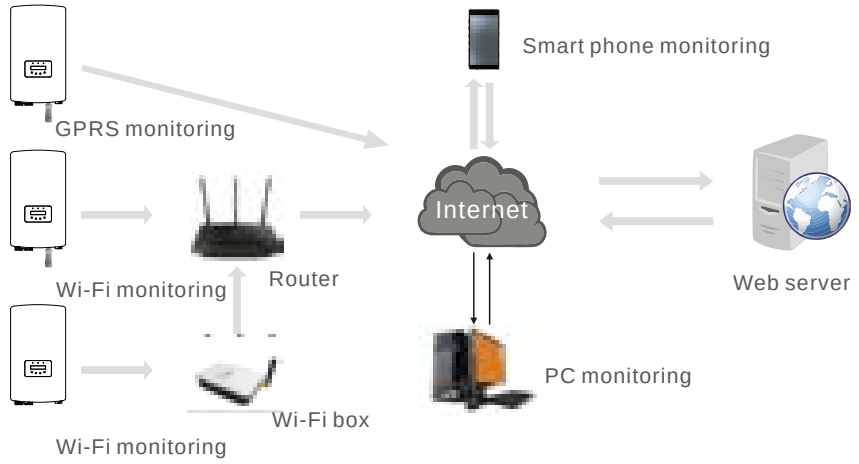

Figure 5.25 Wireless communication function

5. Installation

5.3.6 Meter Connection(optional)

The inverter has intergrated export limitation functionality.
To use this function, a power meter must be installed, it should be installed in the load side or in the grid side, see Figure 5.26 and Figure 5.27. After the inverter power on, please set the corresponding configuration as sections 7.5.11.1.2 and 7.5.11.1.3.
The meter is optional. There are 2 choices, one meter (choice 1) without CT, and the other meter (choice 2) with CT; customers can choice according to different applications and requirements.

Choice 1:

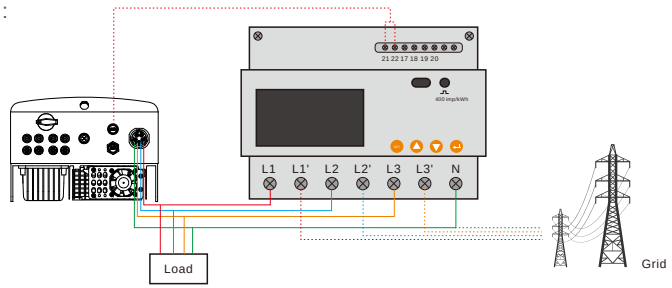

Figure 5.26 Meter Connection (1)

Choice 2:

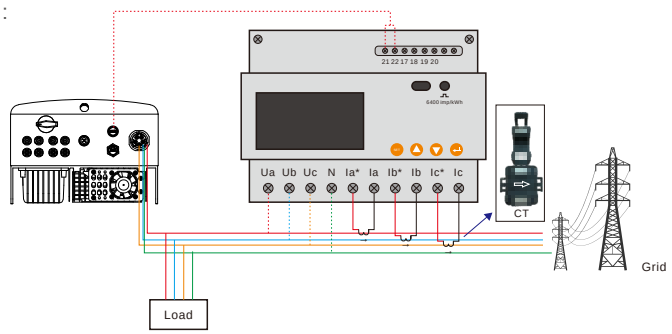

Figure 5.27 Meter Connection (2)

5.3.7 Logic interface connection (For UK and Belgium)

Logic interface is required by Logic interface is required by local regulations in UK and Belgium that can be operated by a simple switch or contactor. When the switch is closed the inverter can operated normally. When the switch is opened, the inverter will reduce it's output power to zero within 5s. Pin5 and Pin6 of RJ45 terminal is used for the logic interface connection.

Please follow below steps to assemble RJ45 connector.

1.Insert the network cable into the communication connection terminal of RJ45.
(As shown in figure 5.28)

Figure 5.28 RJ45 communication connection terminals

2.Use the network wire stripper to strip the insulation layer of the communication cable. According to the standard line sequence of figure 5.29 connect the wire to the plug of RJ45, and then use a network cable crimping tool to make it tight.

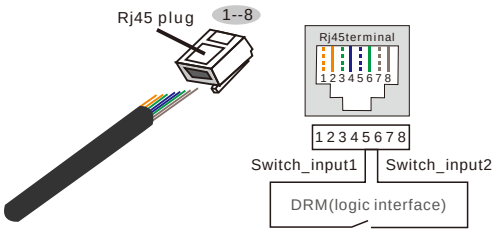

Correspondence between the cables and the stitches of plug, Pin5 and Pin6 of RJ45 terminal is used for the logic interface, other Pins are reserved.

Pin 1: Reserved; Pin 2: Reserved
Pin 3: Reserved; Pin 4: Reserved
Pin 5: Switch_input1; Pin 6: Switch_input2
Pin 7: Reserved; Pin 8: Reserved

Figure 5.29 Strip the insulation layer and connect to RJ45 plug

3.Connect RJ45 to DRM (logic interface) .

After wire connection, please refer chapter 7.5.8.1 to enable the logic interface function.

6.1 Start the Inverter

To start up the Inverter, it is important that the following steps are strictly followed:

1. Switch the grid supply main Switch (AC) ON first.
2. Switch the DC switch ON. If the voltage of PV arrays are higher than start up voltage, the inverter will turn on. The red LED power will light.
3. When both the DC and the AC sides supply to the inverter, it will be ready to generate power. Initially, the inverter will check both its internal parameters and the parameters of the AC grid, to ensure that they are within the acceptable limits. At the same time, the green LED will flash and the LCD displays the information of INITIALIZING.
4. After 30-300 seconds (depending on local requirement), the inverter will start to generate power. The green LED will be on continually and the LCD displays GENERATING.

WARNING:
Do not touch the surface when the inverter is operating. It may be hot and cause burns.

6.2 Stop the Inverter

To stop the Inverter, the following steps must be strictly followed:

1. Turn off the ac switch.
2. Put the DC SWITCH on the inverter in the position of "OFF".
3. Remove the positive and negative dc lines and remove the ac lines.

7. Operation

In normal operation, LCD screen alternatively shows inverter power and operation status (see Figure 7.1). The screen can be scrolled manually by pressing the UP/DOWN keys. Pressing the ENTER key gives access to Main Menu.

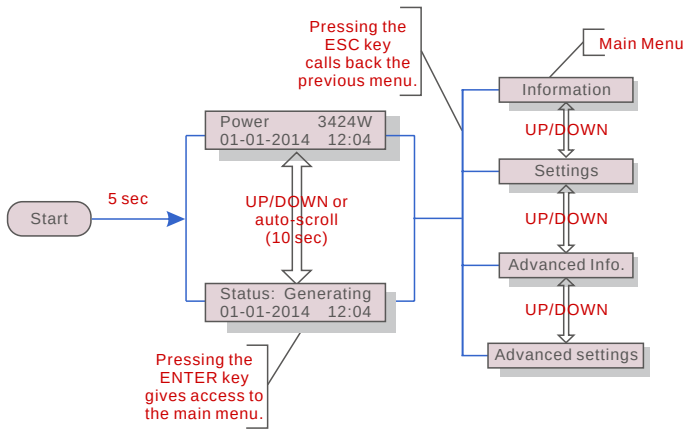

Figure 7.1 Operation Overview

7.1 Main Menu

There are four submenus in the Main Menu (see Figure 7.1):

1. Information
2. Settings
3. Advanced Info.
4. Advanced Settings

7.2 Information

The Canadian Solar three Phase Inverter main menu provides access to operational data and information. The information is displayed by selecting "Information" from the menu and then by scrolling up or down.

Display	Duration	Description
V_DC1 350.8V I_DC1 5.1A	10 sec	V_DC1: Shows input 01 voltage value. I_DC1: Shows input 01 current value.
V_DC2 350.8V I_DC2 5.1A	10 sec	V_DC2: Shows input 02 voltage value. I_DC2: Shows input 02 current value.
V_A 230.4V I_A 8.1A	10 sec	V_A: Shows the grid's voltage value. I_A: Shows the grid's current value.
V_C 230.4V I_C 8.1A	10 sec	V_C: Shows the grid's voltage value. I_C: Shows the grid's current value.
Status: Generating Power: 1488W	10 sec	Status: Shows instant status of the Inverter. Power: Shows instant output power value.
Grid Frequency F_Grid 50.06Hz	10 sec	F_Grid: Shows the grid's frequency value.
Total Energy 0258458 kwh	10 sec	Total generated energy value.
This Month: 0123kwh Last Month: 0123kwh	10 sec	This Month: Total energy generated this month. Last Month: Total energy generated last month.
Today: 15.1kwh Yesterday: 13.5kwh	10 sec	Today: Total energy generated today. Yesterday: Total energy generated yesterday.
Inverter SN 00000000000000	10 sec	Display series number of the inverter.

Table 7.1 Information list

7.2.1 Lock screen

Pressing the ESC key returns to the Main Menu. Pressing the ENTER key locks (Figure 7.2(a)) or unlocks (Figure 7.2 (b)) the screen.

Figure 7.2 Locks and Unlocks the Screen of LCD

7.3 Settings

The following submenus are displayed when the Settings menu is selected:

1.Set Time

2.Set Address

7.3.1 Set Time

This function allows time and date setting. When this function is selected, the LCD will display a screen as shown in Figure 7.3.

```
NEXT=<ENT>  OK=<ESC>
01-01-2016  16:37
```

Figure 7.3 Set Time

Press the UP/DOWN keys to set time and data. Press the ENTER key to move from one digit to the next (from left to right). Press the ESC key to save the settings and return to the previous menu.

7.3.2 Set Address

This function is used to set the address when muti inverters are connected to three monitor. The address number can be assigned from “01”to “99”(see Figure 7.4). The default address number of Canadian Solar Three Phase Inverter is “01”.

```
YES=<ENT>  NO=<ESC>
Set Address: 01
```

Figure 7.4 Set Address

Press the UP/DOWN keys to set the address. Press the ENTER key to save the settings. Press the ESC key to cancel the change and return to the previous menu.

7.4 Advanced Info - Technicians Only

NOTE:
To access to this area is for fully qualified and accredited technicians only. Enter menu “Advanced Info.” and “Advanced settings” need password .

7. Operation

Select “Advanced Info.” from the Main Menu. The screen will require the password as below:

```
YES=<ENT> NO=<ESC>
Password:0000
```

Figure 7.5 Enter password

After enter the correct password the Main Menu will display a screen and be able to access to the following information.

1.Alarm Message 2. Running message 3.Version 4. Daily Energy 5. Monthly Energy 6. Yearly Energy 7. Daily Record 8.Communication Data 9.Warning Message

The screen can be scrolled manually by pressing the UP/DOWN keys. Pressing the ENTER key gives access to a submenu. Press the ESC key to return to the Main Menu.

7.4.1 Alarm Message

The display shows the 100 latest alarm messages (see Figure 7.6). Screens can be scrolled manually by pressing the UP/ DOWN keys. Press the ESC key to return to the previous menu.

```
Alarm001: OV-G-V
Time: 27-11 Data: 7171
```

Figure 7.6 Alarm Message

7.4.2 Running Message

This function is for maintaince person to get running message such as internal temperature, Standard No.1,2,etc.
Screens can be scrolled manually by pressing the UP/DOWN keys.

7.4.3 Version

The screen shows the model version and the software version of the Inverter (see Figure 7.7).

```
Model: 08
Software Version: D20001
```

Figure 7.7 Model Version and Software Version

7.4.4 Daily Energy

The function is for checking the energy generation for selected day.

```
YES=<ENT> NO=<ESC>
Select: 2015-02-23
```

Figure 7.8 Select date for daily energy

Press DOWN key to move the cursor to day, month and year, press UP key to change the digit. Press Enter after the date is fixed.

```
2015-02-22: 051.3kWh
2015-02-23: 061.5kWh
```

Figure 7.9 Daily energy

Press UP/DOWN key to move one date from another.

7.4.5 Monthly Energy

The function is for checking the energy generation for selected month.

```
YES=<ENT> NO=<ESC>
Select: 2015-02
```

Figure 7.10 Select month for monthly energy

Press DOWN key to move the cursor to day and month, press UP key to change the digit. Press Enter after the date is fixed.

```
2015-02: 0510kWh
2015-01: 0610kWh
```

Figure 7.11 Month energy

Press UP/DOWN key to move one date from another.

7. Operation

7.4.6 Yearly Energy

The function is for checking the energy generation for selected year.

```
YES=<ENT> NO=<ESC>
Select: 2015
```

Figure 7.12 Select year for yearly energy

Press DOWN key to move the cursor to day and year, press UP key to change the digit. Press Enter after the date is fixed.

```
2015: 0017513kWh
2014: 0165879kWh
```

Figure 7.13 Yearly energy

Press UP/DOWN key to move one date from another.

7.4.7 Daily record

The screen shows history of changing settings. Only for maintance personel.

7.4.8 Communication Data

The screen shows the internal data of the Inverter (see Figure 7.14), which is for service technicians only.

```
01-05: 01 25 E4 9D AA
06-10: C2 B5 E4 9D 55
```

Figure 7.14 Communication Data

7.4.9 Warning Message

The display shows the 100 latest warn messages (see Figure 7.15). Screens can be scrolled manually by pressing the UP/ DOWN keys. Press the ESC key to return to the previous menu.

```
Msg000:
T: 00-00 00:00 D:0000
```

Figure 7.15 Warning Message

7.5 Advanced Settings - Technicians Only

NOTE:
To access to this area is for fully qualified and accredited technicians only. Please follow 7.4 to enter password to access this menu.

Select Advanced Settings from the Main Menu to access the following options:

1. Select Standard 2. Grid ON/OFF 3. Clear Energy 4. Reset Password
5. Power Control 6. Calibrate Energy 7. Special Settings 8. STD. Mode Settings
9. Restore Settings 10. HMI Update 11. Internal EPM Set 12. External EPM set
13. Restart HMI 14. Debug Parameter 15.DSP Update 16.Compensation Set

7.5.1 Selecting Standard

This function is used to select the grid's reference standard (see Figure 7.16).

```
YES=<ENT> NO=<ESC>
Standard:G59/3
```

Figure 7.16

Press the UP/DOWN keys to select the standard (G59/3, UL-480V, VDE0126, AS4777-15, AS4777-02, CQC380A, ENEL, UL-380V, MEX-CFE, C10/11 and “User-Def” function).
Press the ENTER key to confirm the setting.
Press the ESC key to cancel changes and returns to previous menu.

NOTE:
This function is for technicians use only.

Selecting the “User-Def” menu will access to the following submenu (see Figure 7.17),

```
– OV-G-V1: 260V
  OV-G-V1-T: 1S
```

Figure 7.17

NOTE:
The " User-Def" function can be only used by the service engineer and must be allowed by the local energy supplier.

7. Operation

Below is the setting range for “User-Def”. Using this function, the limits can be changed manually.

OV-G-V1: 220---290V	OV-G-F1: 50.2-53Hz(60.2-64Hz)
OV-G-V1-T: 0.1---9S	OV-G-F1-T: 0.1---9S
OV-G-V2: 220---290V	OV-G-F2: 50.2-53Hz(60.2-64Hz)
OV-G-V2-T: 0.1---1S	OV-G-F2-T: 0.1---9S
UN-G-V1: 90---210V	UN-G-F1: 47-49.5Hz(56-59.8Hz)
UN-G-V1-T: 0.1---9S	UN-G-F1-T: 0.1---9S
UN-G-V2: 90---210V	UN-G-F2: 47-49Hz(56-59.8Hz)
UN-G-V2-T: 0.1---1S	UN-G-F2-T: 0.1---9S
Startup-T:10---600S	
Restore-T:10---600S	

Press the UP/DOWN keys to scroll through items. Press the ENTER key to edit the highlighted item. Press the UP/DOWN keys again to change the setting. Press the ENTER key to save the setting. Press the ESC key to cancel changes and returns to the previous menu.

NOTE
For different countries, the grid standard needs to be set as different according to local requirements. If there is any doubt, please consult Canadian Solar service technicians for details.

7.5.2 Grid ON/OFF

This function is used to start up or stop the power generation of Canadian Solar Three Phase Inverter (see Figure 7.18).

```
– Grid ON
  Grid OFF
```

Figure 7.18 Set Grid ON/OFF

Screens can be scrolled manually by pressing the UP/DOWN keys. Press the ENTER key to save the setting. Press the ESC key to return to the previous menu.

7.5.3 Clear Energy

Clear Energy can reset the history yield of inverter

These two functions are applicable by maintenance personnel only, wrong operation will prevent the inverter from working properly.

7.5.4 Reset Password

This function is used to set the new password for menu “Advanced info.” and “Advanced information” (see Figure 7.19).

```
YES=<ENT> NO=<ESC>
Password: 0000
```

Figure 7.19 Set new password

Enter the right password before set new password. Press the DOWN key to move the cursor, Press the UP key to revise the value. Press the ENTER key to execute the setting.
Press the ESC key to return to the previous menu.

7.5.5 Power control

Active and reactive power can be set through power setting button.
There are 5 item for this sub menu:

1. Set output power 2. Set Reactive Power 3. Out_P With Restore
4. Rea_P With Restore 5. Select PF Curve

This function is applicable by maintenance personnel only, wrong operation will prevent the inverter from reaching maximum power.

7.5.6 Calibrate Energy

Maintenance or replacement could clear or cause a different value of total energy. Use this function could allow user to revise the value of total energy to the same value as before. If the monitoring website is used the data will be synchronous with this setting automatically. (see Figure 7.20).

```
YES=<ENT> NO=<ESC>
Energy:0000000kWh
```

Figure 7.20 Calibrate energy

Press the DOWN key to move the cursor, Press the UP key to revise the value. Press the ENTER key to execute the setting. Press the ESC key to return to the previous menu.

7. Operation

7.5.7 Special Settings

This function is applicable by maintenance personnel only, wrong operation will prevent the inverter from reaching maximum power.

7.5.8 STD Mode settings

There are 5 setting under STD. Mode settings.

1. Working mode 2. Power Rate limit 3. Freq. Derate set 4. 10mins OV-G-V set. 5.Initial Settings

This function is applicable by maintenance personnel only, wrong operation will prevent the inverter from reaching maximum power.

7.5.8.1 Enable logic interface settings

When select G98 or G99 standard to use the logic interface function, please follow below settings to enable the **DRM**. DRM default setting is “OFF” , if DRM set “ON”, but the logic interface un-connected to the switch or the switch is open, the inverter HMI will display “Limit by DRM” and the inverter output power will be limited to zero.

1. Select **Initial Settings**
2. Select **DRM** and set it **“**ON**”**

7.5.9 Restore Settings

There are 5 items in initial setting submenu.
Restore setting could set all item in 7.5.7 special setting to default.
The screen shows as below:

```
Are you sure?
YES=<ENT> NO=<ESC>
```

Figure 7.21 Restore Settings

Press the Enter key to save the setting after setting grid off.
Press the ESC key to return the previous mean.

7.5.10 HMI Update

This function is used for updating the LCD program.

This function is applicable by maintenance personnel only, wrong operation will prevent the inverter from reaching maximum power.

7.5.11 Internal EPM Set

NOTE:
To access to this area is for fully qualified and accredited technicians only.
Please follow 7.4 to enter password to access this menu.

Select EPM Settings from the Main Menu to access the following options:

1. Mode Select 2. Backflow Power 3. Fail safe ON/OFF 4. Backflow Work Mode

7.5.11.1 Mode Select

There are 3 settings in this menu as below:

1. OFF 2. Meter in Load 3. Meter in Grid

7.5.11.1.1 OFF

This function is used to shut down the Export Power Set.

```
ON=<ENT> CANCEL=<ESC>
OFF
```

Figure 7.22

Press the ENTER key to set done.
Press the ESC key to the previous menu.

7. Operation

7.5.11.1.2 Meter in Load

The submenu is used to set meter in Load as shown as 5.3.7 Meter connection(optional).

```
ON=<ENT> CANCEL=<ESC>
Meter in Load
```

Figure 7.23

Press the ENTER key to set done.
Press the ESC key to the previous menu.

7.5.11.1.3 Meter in Grid

The submenu is used to set meter in Load as shown as 5.3.7 Meter connection(optional).

```
ON=<ENT> CANCEL=<ESC>
Meter in Grid
```

Figure 7.24

Press the ENTER key to set done.
Press the ESC key to the previous menu.

7.5.11.2 Backflow Power

This submenu is used for set allowed power that inverter can generate to grid .

```
->Set Backflow Power
```

Figure 7.25 Set the backflow power

```
YES=<ENT> NO=<ESC>
P_Backflow:-0001W
```

Figure 7.26

Press the UP/DOWN keys to set data.Press the ENTER key to set backflow power.
Then press DOWN keys to move the cursor, press UP to change the number.
Press the ESC key to save the settings and return to the previous menu.

7.5.11.3 Fail safe ON/OFF

This function is used to remind whether the EPM is ON or not. The default setting is ON.

YES=<ENT> NO=<ESC>
Fail Safe Set:ON

Figure 7.27 Set the Fail Safe ON/OFF

Press the UP/DOWN keys to set ON/OFF.Press the ENTER key to set done .
Press the ESC key to the previous menu.

7.5.11.4 Backflow Work Mode

This submenu is used for set backflow work mode: 01, 02. “01” is the default mode.

->Backflow Work Mode

Figure 7.28 Set the Backflow work mode

YES=<ENT> NO=<ESC>
Mode:01

Figure 7.29

Mode “01”, As shown in the figure 7.31, the average limiting mode, the output power of each phase is the average of the three-phase load power, and it is more than the phase of the lowest power in three phases.

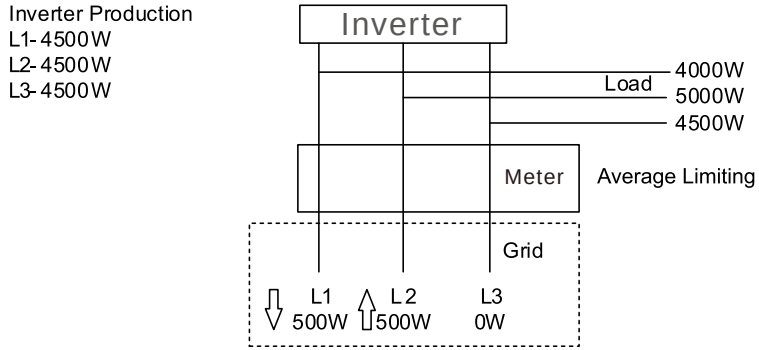

Figure 7.30

Mode “02”, As shown in the figure 7.32 the per phase limiting mode, the inverter only generate the power that equals to one of three-phase load power that is the lowest load power of a certain phase.

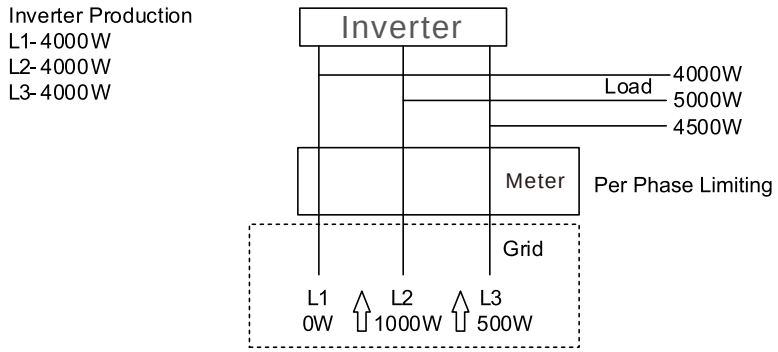

Figure 7.31

7.5.12 External EPM Set

This setting should only be turned on when Canadian Solar external EPM device is used.
Two options are available 5G-EPM and Others-EPM.

->5G-EPM
Others-EPM

Figure 7.32

5G-EPM Failsafe Option should be turned ON when 5G series EPM device is used
Others-EPM Failsafe Option should be turned ON when 2G series EPM device is used
Only one option can be activated each time.

7.5.13 Restart HMI

The function is used for restart the HMI.

This function is applicable by maintenance personnel only, wrong operation will prevent the inverter from reaching maximum power.

7.5.14 Debug Parameter

This function is used for manufacturer maintenance personnel only.

7.5.15 DSP Update

The function is used for update the DSP.

This function is applicable by maintenance personnel only, wrong operation will prevent the inverter from reaching maximum power.

7.5.16 Compensation Set

This function is applicable by maintenance personnel only, wrong operation will prevent the inverter from reaching maximum power.

Canadian Solar Three Phase Inverter does not require any regular maintenance. However, cleaning the dust on heat-sink will help the inverter to dissipate the heat and increase its life time.
The dust can be removed with a soft brush.

CAUTION:
Do not touch the inverter's surface when it is operating. Some parts of the inverter may be hot and cause burns. Turn off the inverter (refer to Section 6.2) and wait for a cool-down period before before any maintenance or cleaning operation.

The LCD and the LED status indicator lights can be cleaned with a damp cloth if they are too dirty to be read.

NOTE:
Never use any solvents, abrasives or corrosive materials to clean the inverter.

8.1 Fan Maintenance

If the fan does not work properly, the inverter will not be cooled effectively.
and it may affect the effective operation of the inverter .
Therefore, it is necessary to clean or replace a broken fan as follows:

1. Disconnect the AC power.
2. Turn the DC switch to "OFF" position.
3. Wait for 10 minutes at least.
4. Disconnect all electric connection.
5. Place the inverter on the platform.

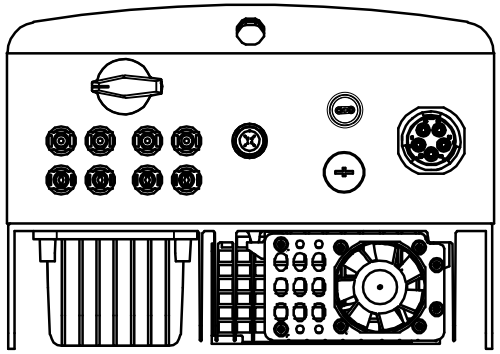

6. Remove the 4 screws on the fan plate and pull out the fan assembly slowly.

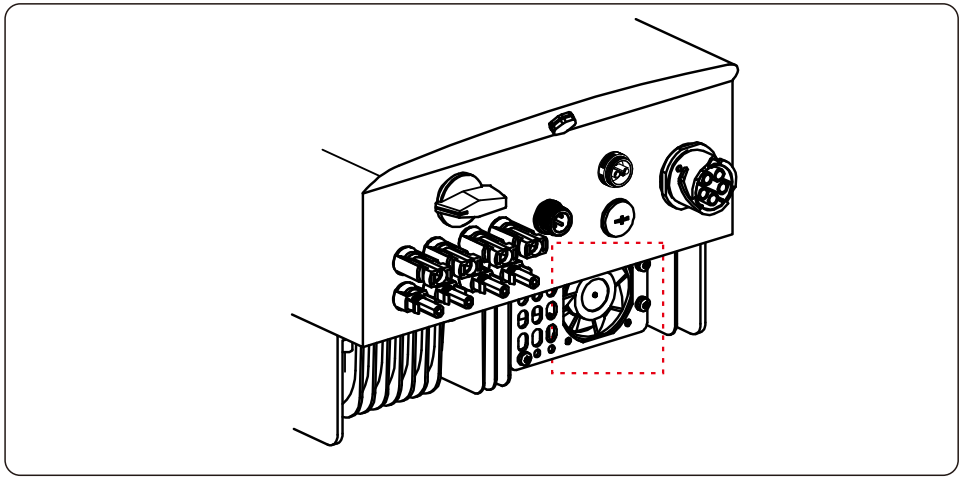

7. Disconnect the fan connector carefully and take out the fan.
8. Clean or replace the fan. Assemble the fan on the rack.
9. Connect the electrical wire and reinstall the fan assembly. Restart the inverter.

9. Troubleshooting

The inverter is designed in accordance with the most important international grid-tied standards and safety and electromagnetic compatibility requirements. Before delivering to the customer, the inverter has been subjected to several tests to ensure its optimal operation and reliability.

In case of failure, the LCD screen will display an alarm message. In this case, the inverter may stop feeding into the grid. The failure descriptions and their corresponding alarm messages are listed in Table 9.1:

Alarm Message	Failure description	Solution
No power	Inverter no power on LCD	1.Check PV input connections 2.Check DC input voltage (single phase >120V, three phase >350V) 3.Check if PV+/- is reversed
LCD show initializing all the time	Can not start-up	1.Check if the connector on main board or power board are fixed. 2.Check if the DSP connector to power board are fixed.
OV-G-V01/02/03/04	Over grid voltage	1.Resistant of AC cable is too high. Change bigger size grid cable 2.Adjust the protection limit if it's allowed by electrical company.
UN-G-V01/02	Under grid voltage	1.Use user define function to adjust the protection limit if it's allowed by electrical company.
OV-G-F01/02	Over grid frequency	
UN-G-F01/02	Under grid frequency	
G-IMP	High grid impedance	
NO-GRID	No grid voltage	1.Check connections and grid switch. 2.Check the grid voltage inside inverter terminal.
OV-DC01/02/03/04	Over DC voltage	1.Reduce the module number in series
OV-BUS	Over DC bus voltage	1.Check inverter inductor connection 2.Check driver connection
UN-BUS01/02	Under DC bus voltage	
GRID-INTF01/02	Grid interference	1.Restart inverter 2.Change power board
OV-G-I	Over grid current	
IGBT-OV-I	Over IGBT current	
DC-INTF OV-DCA-I	DC input overcurrent	1.Restart inverter 2.Identify and remove the string to the fault MPPT 2.Change power board
IGFOL-F	Grid current tracking fail	1.Restart inverter or contact installer.
IG-AD	Grid current sampling fail	
OV-TEM	Over Temperature	1.Check inverter surrounding ventilation. 2.Check if there's sunshine direct on inverter in hot weather.
INI-FAULT	Initialization system fault	1.Restart inverter or contact installer.
DSP-B-FAULT	Comm. failure between main and slave DSP	
12Power-FAULT	12V power supply fault	
PV ISO-PRO 01/02	PV isolation protection	1.Remove all DC input, reconnect and restart inverter one by one. 2.Identify which string cause the fault and check the isolation of the string.

9. Troubleshooting

Alarm Message	Failure description	Solution
ILeak-PRO 01/02/03/04	Leakage current protection	1.Check AC and DC connection 2.Check inverter inside cable connection.
RelayChk-FAIL	Relay check fail	1.Restart inverter or contact installer.
DCinj-FAULT	High DC injection current	
AFCI self-detection (model with AFCI module)	AFCI module self-detect fault	1.Restart inverter or connect technician.
Arcing protection (model with AFCI module)	Detect arc in DC circuit	1. Check inverter connection whether arc exists and restart inverter.
Screen OFF with DC applied	Inverter internally damaged	1.Do not turn off the DC switches as it will damage the inverter. 2.Please wait for the solar irradiance reduces and confirm the string current is less than 0.5A with a clip-on ammeter and then turn off the DC switches. 3.Please note that any damages due to wrong operations are not covered in the device warranty.

Table 9.1 Fault message and description

NOTE:
If the inverter displays any alarm message as listed in Table 9.1; please turn off the inverter (refer to Section 5.2 to stop your inverter) and wait for 5 minutes before restarting it (refer to Section 5.1 to start your inverter). If the failure persists, please contact your local distributor or the service center. Please keep ready with you the following information before contacting us.

1. Serial number of Canadian Solar Three Phase Inverter;
2. The distributor/dealer of Canadian Solar Three Phase Inverter (if available);
3. Installation date.
4. The description of problem (i.e. the alarm message displayed on the LCD and the status of the LED status indicator lights. Other readings obtained from the Information submenu (refer to Section 6.2) will also be helpful.);
5. The PV array configuration (e.g. number of panels, capacity of panels, number of strings , etc.);
6. Your contact details.

10. Specifications

Model	CSI-12K-T400GL01-E
Max. DC input power (Watts)	14500
Max. DC input voltage (Volts)	1000
Rated DC voltage (Volts)	600
Start-up voltage (Volts)	180
MPPT voltage range (Volts)	160...850
Max. input current (Amps)	22+22
Max short circuit input current (Amps)	34.3+34.3
MPPT number/Max input strings number	2/4
Rated output power (Watts)	12000
Max. output power (Watts)	13200
Max. apparent output power (VA)	13200
Rated grid voltage (Volts)	3/N/PE~400
Rated output current (Amps)	17.3
Power Factor (at rated output power)	0.8leading~0.8lagging
THDi (at rated output power)	<1.5%
Rated grid frequency (Hertz)	50/60
Operating frequency range (Hertz)	47...52 or 57...62
Max.efficiency	98.7%
EU efficiency	98.1%
MPPT efficiency	>99.5%
Dimensions	310W*563H*219D (mm)
Weight	18.9kg
Topology	Transformerless
Operating ambient temperature range	-25 . . . 60
Ingress protection	IP65
Noise emission (typical)	<60 dBA
Cooling concept	Intelligent redundant fan-cooling
Max.operation altitude	4000m
Designed lifetime	>20 years
Grid connection standard	EN50438, G83/2, G98, G99, AS4777.2:2015, VDE0126-1-1, IEC61727, VDE N4105, C10/11
Operating surroundings humidity	0...100% Condensing
Connention	Mc4 connector and Ip67 rated plug
Display	LCD, 2×20 Z.
Communication connections	4 pins RS485 connector
Monitoring	WiFi or GPRS
Warranty Terms	5 Years STD (Extendable to 20 Years)

Model	CSI-15K-T400GL01-E
Max. DC input power (Watts)	18000
Max. DC input voltage (Volts)	1000
Rated DC voltage (Volts)	600
Start-up voltage (Volts)	180
MPPT voltage range (Volts)	160...850
Max. input current (Amps)	22+22
Max short circuit input current (Amps)	34.3+34.3
MPPT number/Max input strings number	2/4
Rated output power (Watts)	15000
Max. output power (Watts)	16500
Max. apparent output power (VA)	16500
Rated grid voltage (Volts)	3/N/PE~400
Rated output current (Amps)	21.7
Power Factor (at rated output power)	0.8leading~0.8lagging
THDi (at rated output power)	<1.5%
Rated grid frequency (Hertz)	50/60
Operating frequency range (Hertz)	47...52 or 57...62
Max.efficiency	98.7%
EU efficiency	98.1%
MPPT efficiency	>99.5%
Dimensions	310W*563H*219D (mm)
Weight	18.9kg
Topology	Transformerless
Operating ambient temperature range	-25 . . . 60
Ingress protection	IP65
Noise emission (typical)	<60 dBA
Cooling concept	Intelligent redundant fan-cooling
Max.operation altitude	4000m
Designed lifetime	>20 years
Grid connection standard	EN50438, G83/2, G98, G99, AS4777.2:2015, VDE0126-1-1, IEC61727, VDE N4105, C10/11
Operating surroundings humidity	0...100% Condensing
Connention	Mc4 connector and Ip67 rated plug
Display	LCD, 2×20 Z.
Communication connections	4 pins RS485 connector
Monitoring	WiFi or GPRS
Warranty Terms	5 Years STD (Extendable to 20 Years)

10. Specifications

Model	CSI-17K-T400GL01-E
Max. DC input power (Watts)	20400
Max. DC input voltage (Volts)	1000
Rated DC voltage (Volts)	600
Start-up voltage (Volts)	180
MPPT voltage range (Volts)	160...850
Max. input current (Amps)	22+22
Max short circuit input current (Amps)	34.3+34.3
MPPT number/Max input strings number	2/4
Rated output power (Watts)	17000
Max. output power (Watts)	18700
Max. apparent output power (VA)	18700
Rated grid voltage (Volts)	3/N/PE~400
Rated output current (Amps)	24.6
Power Factor (at rated output power)	0.8leading~0.8lagging
THDi (at rated output power)	<1.5%
Rated grid frequency (Hertz)	50/60
Operating frequency range (Hertz)	47...52 or 57...62
Max.efficiency	98.7%
EU efficiency	98.1%
MPPT efficiency	>99.5%
Dimensions	310W*563H*219D (mm)
Weight	19.8kg
Topology	Transformerless
Operating ambient temperature range	-25 . . . 60
Ingress protection	IP65
Noise emission (typical)	<60 dBA
Cooling concept	Intelligent redundant fan-cooling
Max.operation altitude	4000m
Designed lifetime	>20 years
Grid connection standard	EN50438, G83/2, G98, G99, AS4777.2:2015, VDE0126-1-1, IEC61727, VDE N4105, C10/11
Operating surroundings humidity	0...100% Condensing
Connention	Mc4 connector and Ip67 rated plug
Display	LCD, 2×20 Z.
Communication connections	4 pins RS485 connector
Monitoring	WiFi or GPRS
Warranty Terms	5 Years STD (Extendable to 20 Years)

10. Specifications

Model	CSI-20K-T400GL01-E
Max. DC input power (Watts)	24000
Max. DC input voltage (Volts)	1000
Rated DC voltage (Volts)	600
Start-up voltage (Volts)	180
MPPT voltage range (Volts)	160...850
Max. input current (Amps)	22+22
Max short circuit input current (Amps)	34.3+34.3
MPPT number/Max input strings number	2/4
Rated output power (Watts)	20000
Max. output power (Watts)	22000
Max. apparent output power (VA)	22000
Rated grid voltage (Volts)	3/N/PE~400
Rated output current (Amps)	28.9
Power Factor (at rated output power)	0.8leading~0.8lagging
THDi (at rated output power)	<1.5%
Rated grid frequency (Hertz)	50/60
Operating frequency range (Hertz)	47...52 or 57...62
Max.efficiency	98.7%
EU efficiency	98.1%
MPPT efficiency	>99.5%
Dimensions	310W*563H*219D (mm)
Weight	19.8kg
Topology	Transformerless
Operating ambient temperature range	-25 . . . 60
Ingress protection	IP65
Noise emission (typical)	<60 dBA
Cooling concept	Intelligent redundant fan-cooling
Max.operation altitude	4000m
Designed lifetime	>20 years
Grid connection standard	EN50438, G83/2, G98, G99, AS4777.2:2015, VDE0126-1-1, IEC61727, VDE N4105, C10/11
Operating surroundings humidity	0...100% Condensing
Connention	Mc4 connector and Ip67 rated plug
Display	LCD, 2×20 Z.
Communication connections	4 pins RS485 connector
Monitoring	WiFi or GPRS
Warranty Terms	5 Years STD (Extendable to 20 Years)